REV.	NOTES	DATE
A	RELEASED	2017/08/07

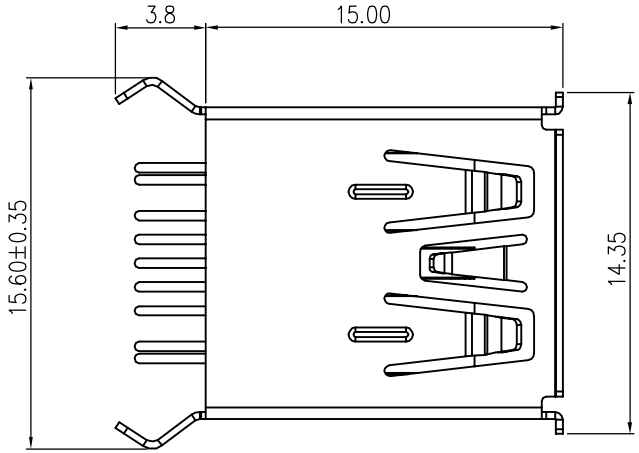

Remark:
1.MATERIAL:
1.1 Housing:PBT COLCR:BLUE.
1.2 terminals:Copper Alloy
1.3 Front Shell:BRASS
2.characteristics:
2.1 Rating Voltage : 30V AC.
2.2 Rating Current:PIN1&PIN4(Vbus&Correponding ground PIN)
1.8A MAX Other PINS 0.25A min.
2.3 Contact Resistance:PIN1&PIN4:30 mΩ MAX. Other PINS: 50 mΩ
2.4 Insulation Resistance:100 MΩ MIN.
2.5 Withstanding Voltage:AC 100V between adjacent contacts
2.6 Mating force: 3.57Kgf MAX(35N MAX)
2.7 Extraction force:1Kgf Min(9.8N Min)
2.8 Life test:1500Cycles MIN.
2.9 Temperature Range: −55℃～+80℃.

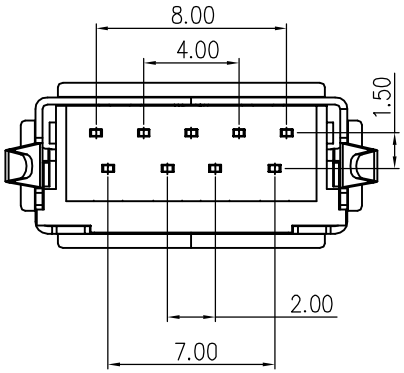

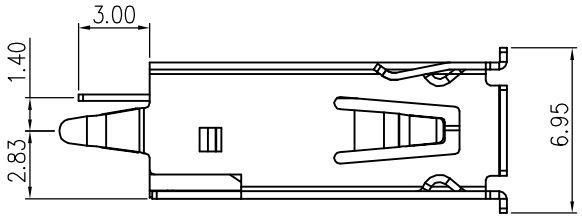

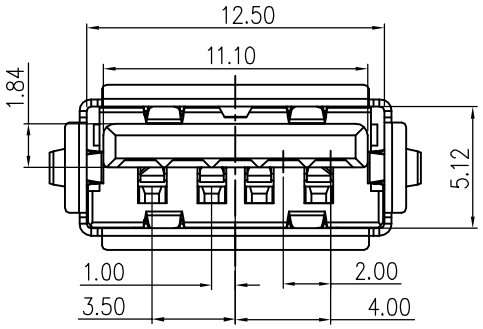

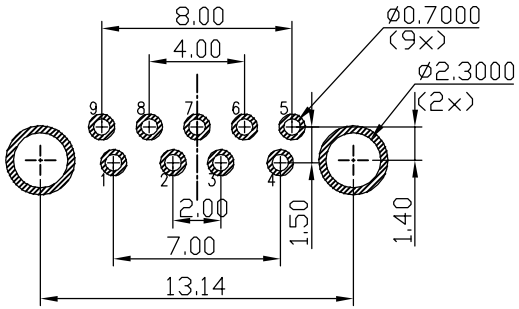

REFERENCE PCB LAYOUT

DIMENSIONS
TOLERANCE
METRIC
X :±0.5
X.X :±0.30
X.XX :±0.20
ANGLES
X :±1°
X.X :±0.5°

單位(UNITS)	mm	東莞翊豐精密五金有限公司						
數量(QT'Y)	N/A							
材料(MT'L)	SEE NOTE							
處理(FINISH)	SEE NOTE	圖名(NAME)						
繪圖(DRAW)		USB 3.0 AF 180度H15插板半金錫1U"						
設計(DE'N)		料號(PART NUMBER)	AAUS+US09P−0807					
		圖號(DRAW NUMBER)						
審校(CH'K)		圖檔(FILE NAME .DWG)						
核准(APP'D)		比例(SCALE)	1/1	圖紙(SIZE)	A4	頁次(SHEET)	1	版次(REV.) A